TARA HOT & COLD WATER DISPENSER - Chrome

TARA

17 861 888

- 146mm projection
- rigid, thermally insulated spout
- laminar flow
- height of mixer 288 mm
- height up to laminar flow regulator 180 mm
- hole diameter 35 mm
- provides filtered, hot water up to 93°C
- provides filtered, cold water
- max. flow 2 l/min at 3 bar flow pressure
- ready-to-use control unit for wall mounting (137mm x 159mm x 60mm)
- electronic magnetic valve
- 100-230 V, 50-60 Hz, 18 W power supply unit, incl. country-specific adapter set
- lead-free
- Spout ring cannot be removed.
- This product can help a building meet the requirements of Green Building Rating Systems, e.g. LEED®, BREEAM®, DGNB

A minimum flow pressure of 3 bar is necessary for the HOT & COLD WATER DISPENSER to work perfectly in conjunction with a hot water tank and filter.
In addition, the installation must be above a kitchen sink.
The filter cartridge must be changed every six months. The installation instructions contain further information for guidance.
Detailed planning information and technical data can be found at www.dornbracht.com/professional

A minimum flow pressure of 3 bar is necessary for the HOT & COLD WATER DISPENSER to work perfectly in conjunction with a hot water tank and filter.

In addition, the installation must be above a kitchen sink.

The filter cartridge must be changed every six months. The installation instructions contain further information for guidance.

Detailed planning information and technical data can be found at www.dornbracht.com/professional

Chrome	17 861 888-00
Brushed Platinum	17 861 888-06
Platinum	17 861 888-08
Durabrass (23kt Gold)	17 861 888-09
Dark Chrome	17 861 888-19
Brushed Durabrass (23kt Gold)	17 861 888-28
Matte Black	17 861 888-33
Brushed Champagne (22kt Gold)	17 861 888-46
Champagne (22kt Gold)	17 861 888-47
Brushed Chrome	17 861 888-93
Brushed Dark Platinum	17 861 888-99

Required miscellaneous

Hot water tank incl. filter - 12 892 970 90

TARA HOT & COLD WATER DISPENSER - Chrome

17 861 888

mm [inches]

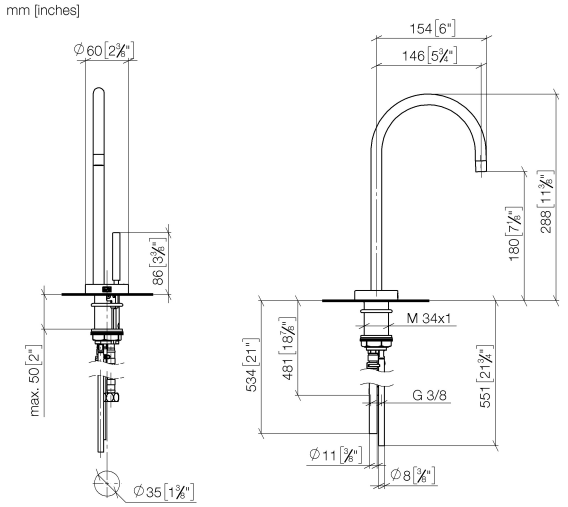

Flow rate chart

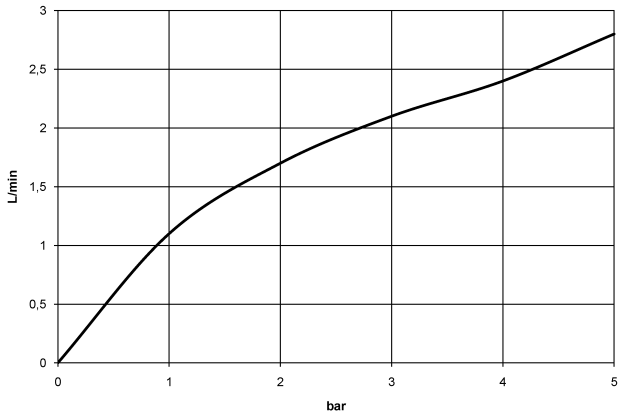

Certificates

IAPMO_4976 (5). IAPMO_N-4976. GDV_0400297. LGA_28297. IAPMO_6397.

TARA HOT & COLD WATER DISPENSER - Chrome

17 861 888

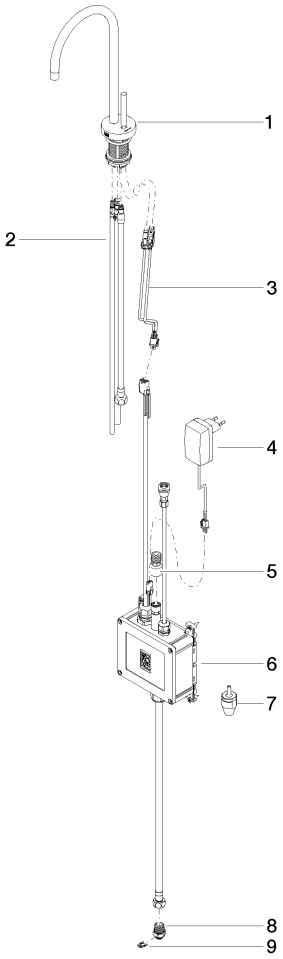

Spare parts list

No.	Item Number	Name	Quantity used	Delivery time
1	90 17 85 100 06-00	fitting	1	10
2	90 30 04 067 00 90	hose	1	2
3	90 10 01 048 00 90	electronic accessories	1	2
4	04 10 01 050 00 90	power supply	1	60
5	12 866 970 90	adaptor	1	2
6	90 11 11 064 01 90	electronic accessories	1	2
7	90 24 04 291 00 90	insert	1	2
8	09 24 04 293 90	nipple	1	2
9	09 16 01 045 90	ring	1	2

We reserve the right to change designs, product range and technical specifications without prior notice.
More information can be found at: www.dornbracht.com +49 (0) 2371 8899 900 mail@dornbracht.com